Chapter 4 – The BJT
Bipolar Junction Transistor

4.1 BJT Basics (Structure, Symbols, Parameters)

4.2 Static Analysis

4.3 BJT Circuit Models (Ebers-Moll, Hybrid-Pi)

Literature:

Pierret, Chapter 10-12, page 371-462

Jaeger, Blalock, Chapter 5, page 207-261

4.1 BJT Basics

4.1.1 Structure and Fabrication

4.1.2 Terminology and Effects

- Circuit Symbols
- Circuit Configurations
- Modes of Operation

4.1.3 Basic Operation

- Equilibrium
- Active Mode

Pierret, Chapter 10, page 371-385

4.1.1 BJT Structure & Fabrication

BJT – Bipolar Junction Transistor

- **Bipolar**: **electrons and holes** participate in the conduction process
- **Junction**: two **coupled** pn-junctions with a joint base region
- **Transistor**: transistor action requires that the **base width W** is **much smaller than** the **minority carrier diffusion length L** in the base

$$\boxed{W << L = \sqrt{D\tau}}$$

Basic Device Structures

PNP Transistor

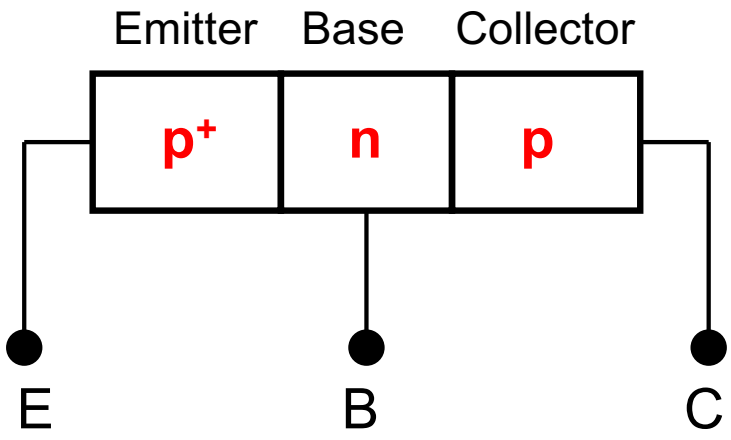

- Easier to explain and understand

$N_{A,E} \gg N_{D,B} > N_{A,C}$

NPN Transistor

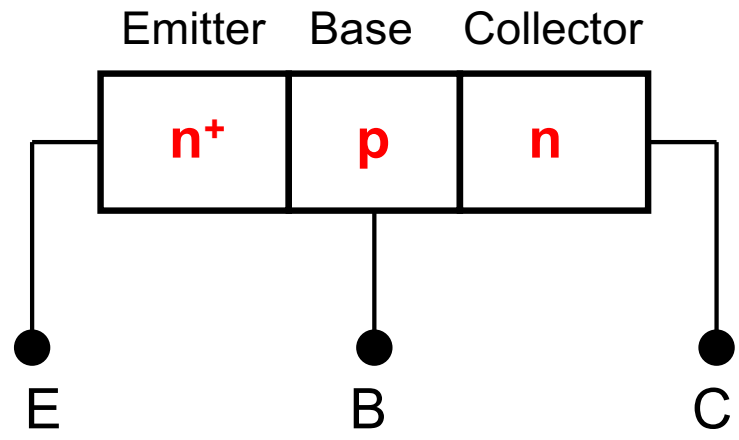

- More common in device applications, because of the larger mobility of the minority carriers (electrons) in the base

$N_{D,E} \gg N_{A,B} > N_{D,C}$

NPN BJT Cross-Section

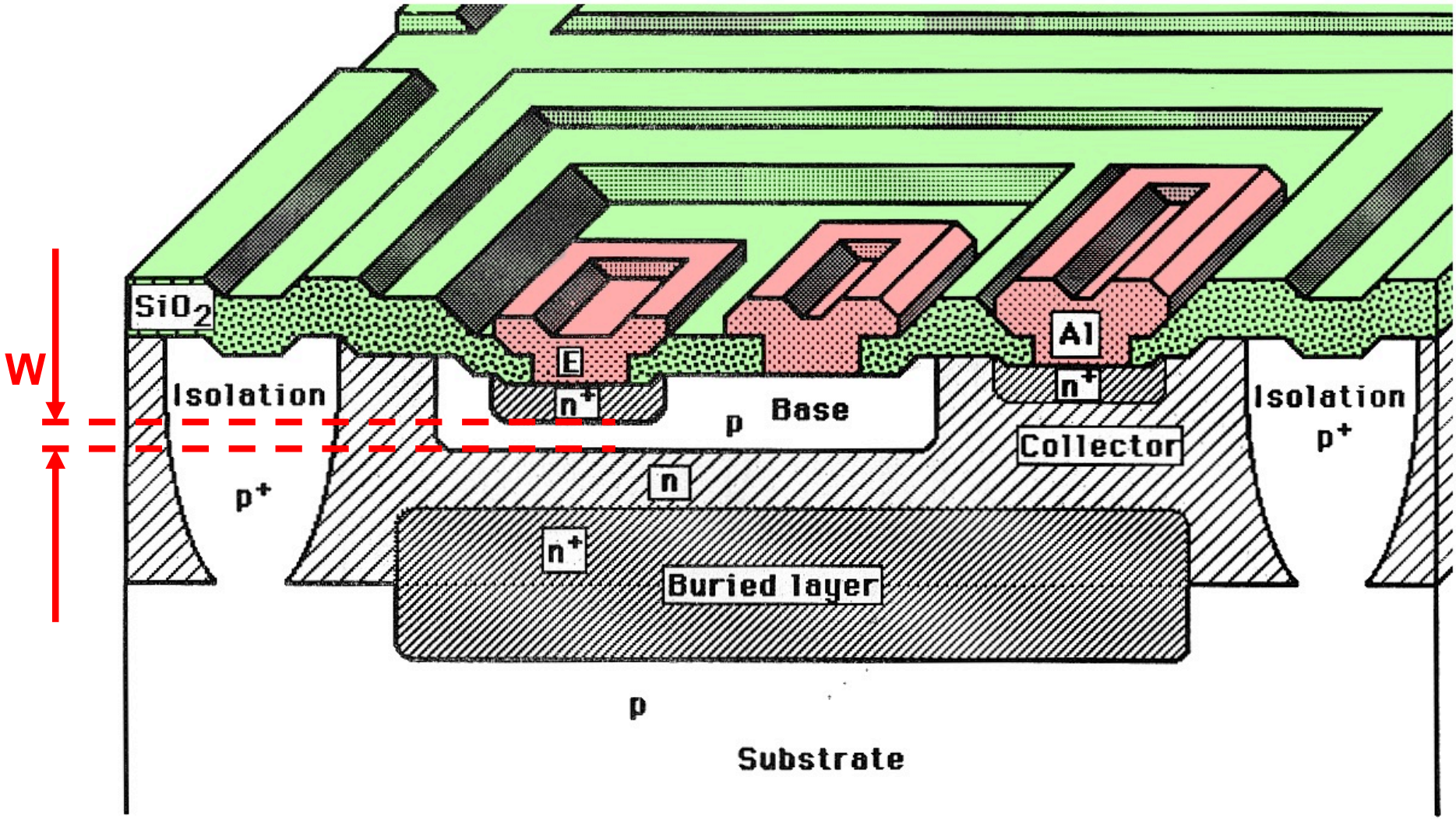

4.1.2 Terminology and Effects
– Circuit Symbols –

PNP Transistor

p^+	n	p
E	B	C

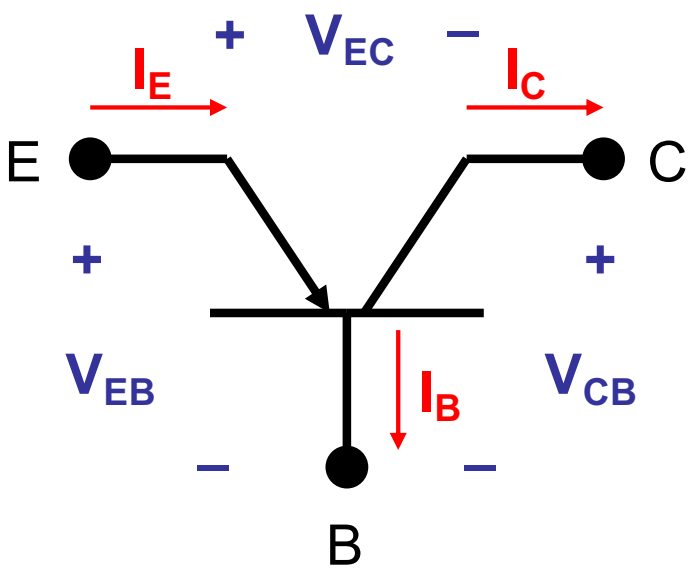

NPN Transistor

n^+	p	n
E	B	C

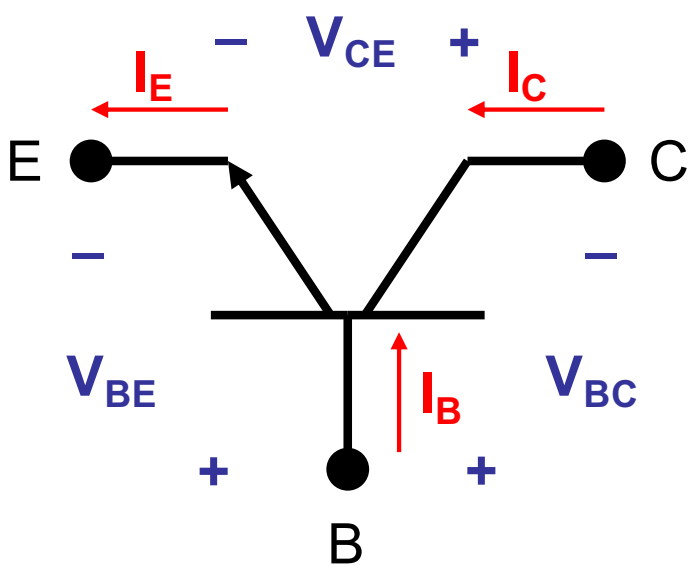

(i) $I_E = I_B + I_C$ (ii) $V_{EB} + V_{BC} + V_{CE} = 0$ with $V_{ab} = -V_{ba}$

Comments to Terminology

- **Voltages**: the first letter in the double subscript of the voltages identifies the (+) terminal, the second letter the (–) terminal; V_{EB}, for example, is the dc voltage drop between emitter (+) and base (–); keep in mind, that a voltage can also be negative, i.e. $V_{EB} < 0$ actually means that the potential is more negative on the emitter compared to the base.
- **Voltages nomenclature**: the voltage nomenclature for the pnp and npn BJT are chosen in a way, that a positive voltage means a forward-biased, a negative voltage a reverse-biased junction; this way the results from the pn-junction chapters can be "reused".

Modes of Operation

Biasing Mode	E-B Junction Polarity	B-C Junction Polarity
Active	**F**	**R**
Inverted	**R**	**F**
Saturation	**F**	**F**
Cutoff	**R**	**R**

F = forward bias
R = reverse bias

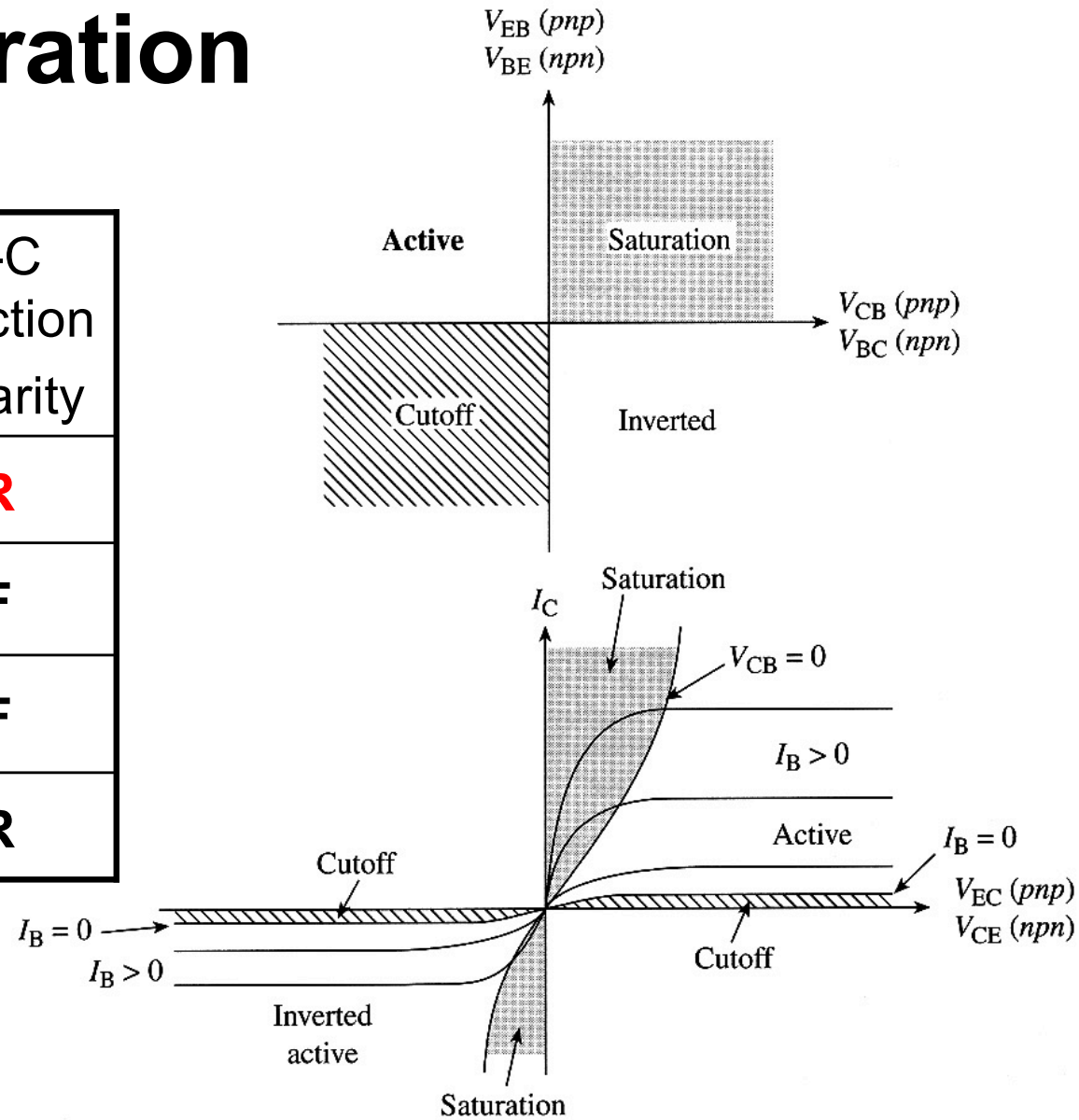

Pierret, Fig. 10.5

4.1.3 Basic Operation – Equilibrium –

- **Doping:**
  $N_{A,E} \gg N_{D,B} > N_{A,C}$
- **Depletion Regions (DR):**
  E-B Junction: DR mainly in B
  B-C Junction: DR mainly in C
- **Fermi Level E_F:**
  Flat across BJT because of equilibrium
- **Effective Base Width W:**
  Smaller than base width W_B because of depletion regions

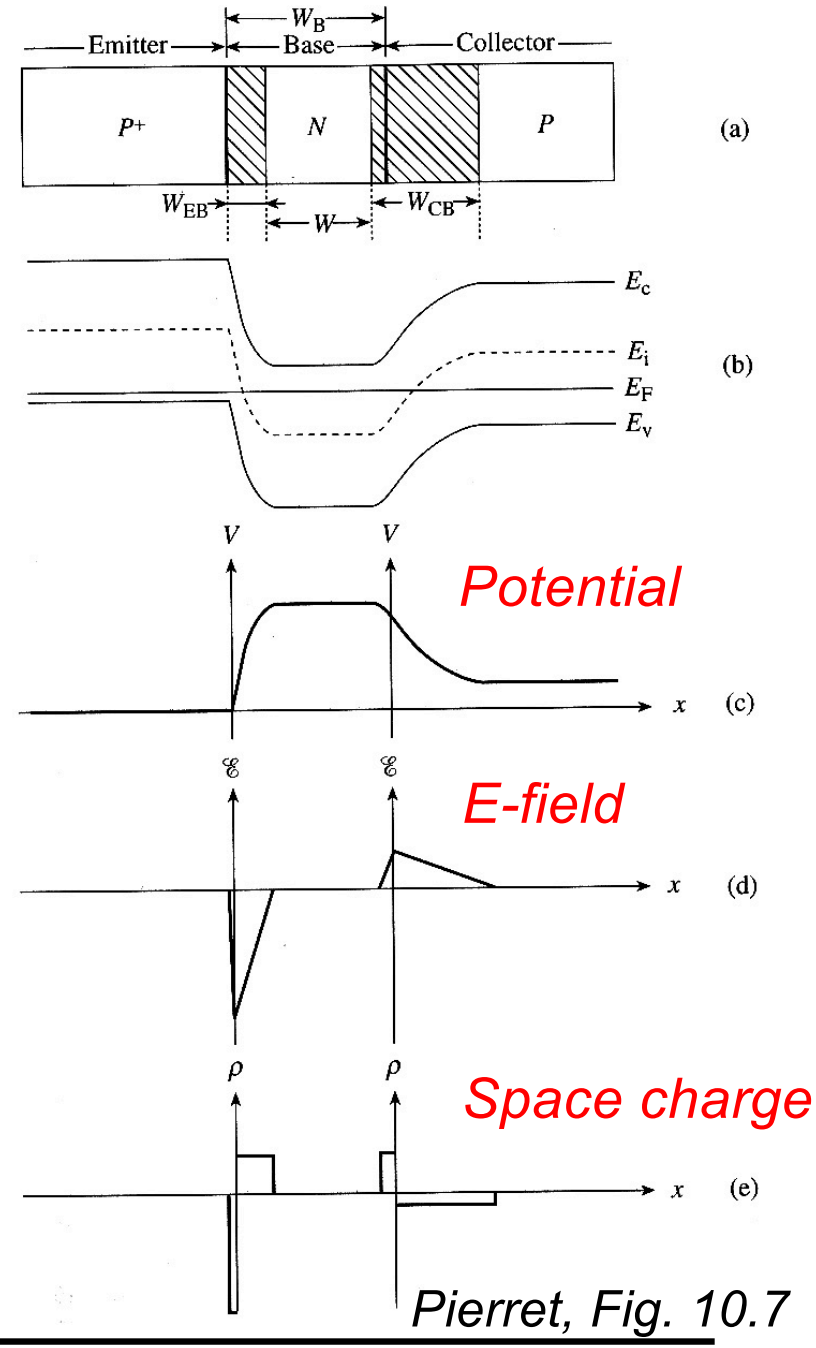

Pierret, Fig. 10.7

PNP BJT in Active Mode

- PNP transistor in **common-base configuration** with forward-biased E-B junction and reverse-biased B-C junction
- In case W « L_B, holes injected from the emitter into the base can diffuse across the base without recombination and are then swept into the collector

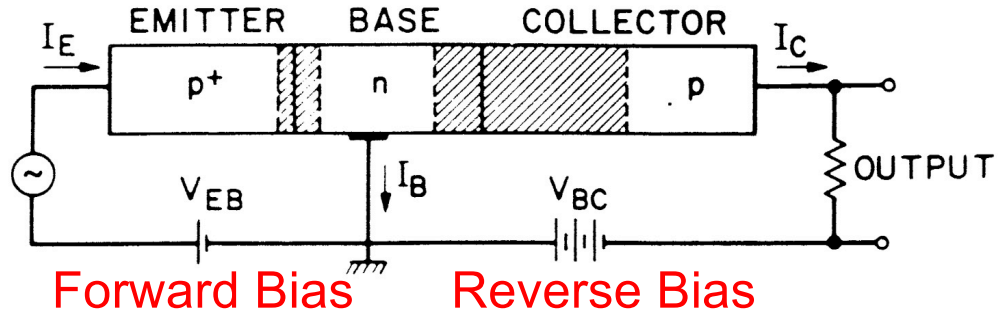

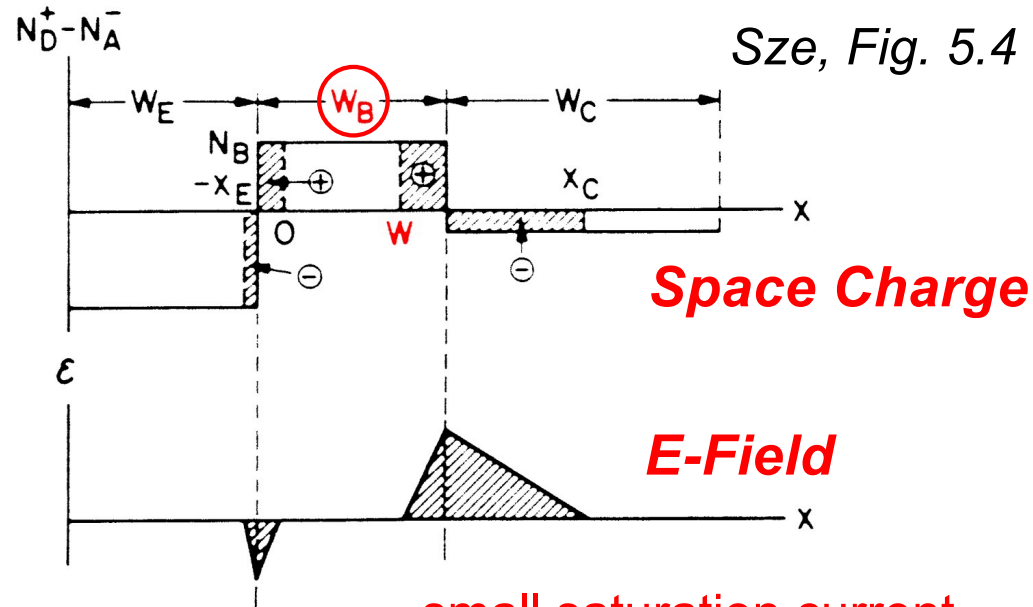

Sze, Fig. 5.4

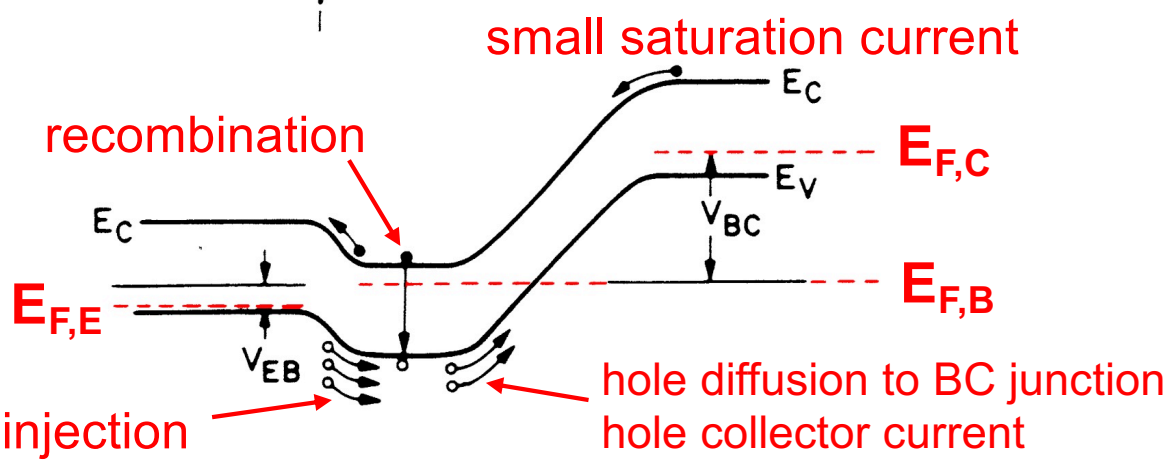

Active Mode – The Currents I

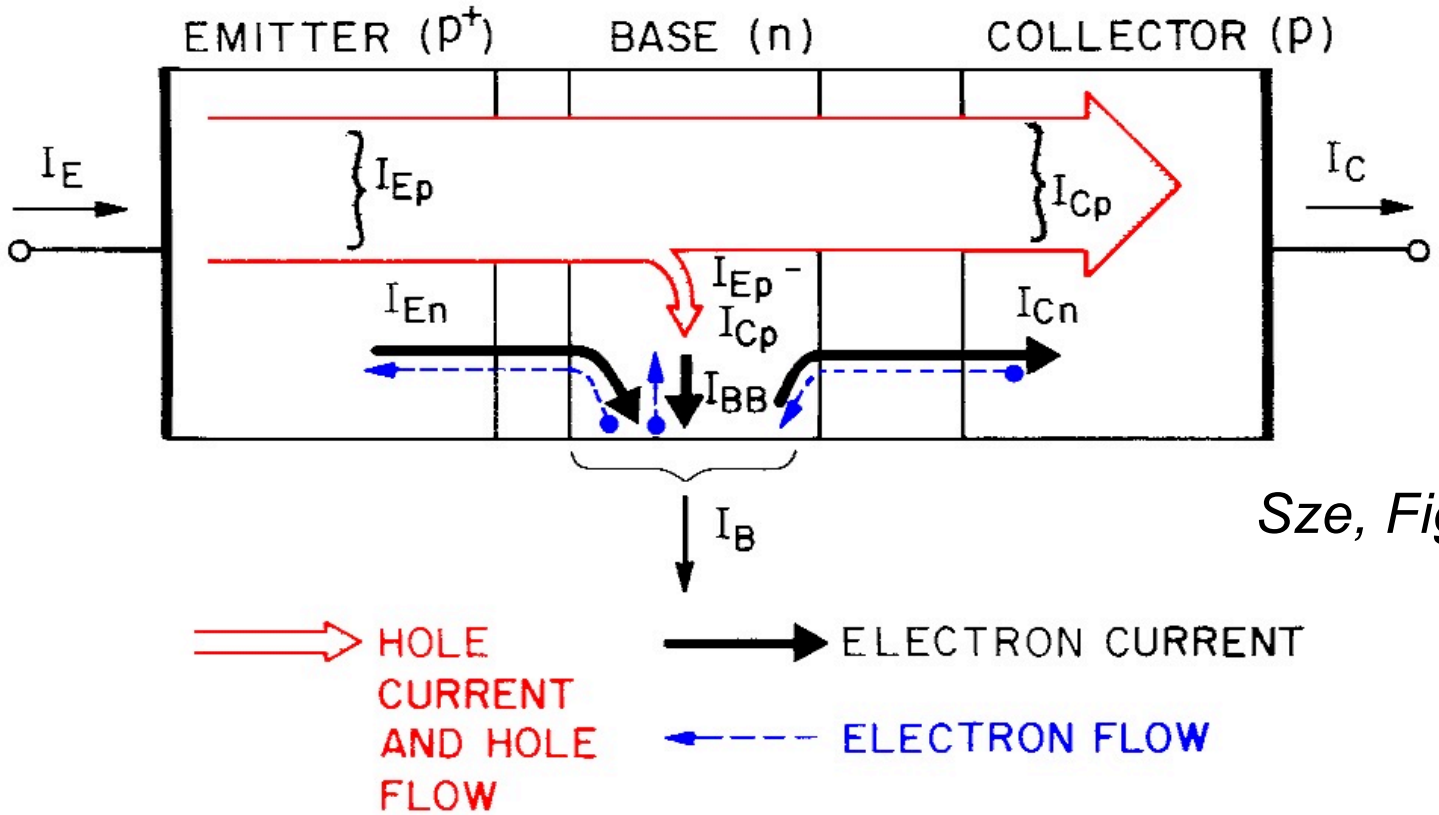

Sze, Fig. 5.5

I_E	Emitter current	I_B	Base current	I_C	Collector current
I_{Ep}	Emitter hole current	I_{BB}	Recombination current	I_{Cp}	Collector hole current
I_{En}	Emitter electron current			I_{Cn}	Collector electron current

Active Mode – The Currents II

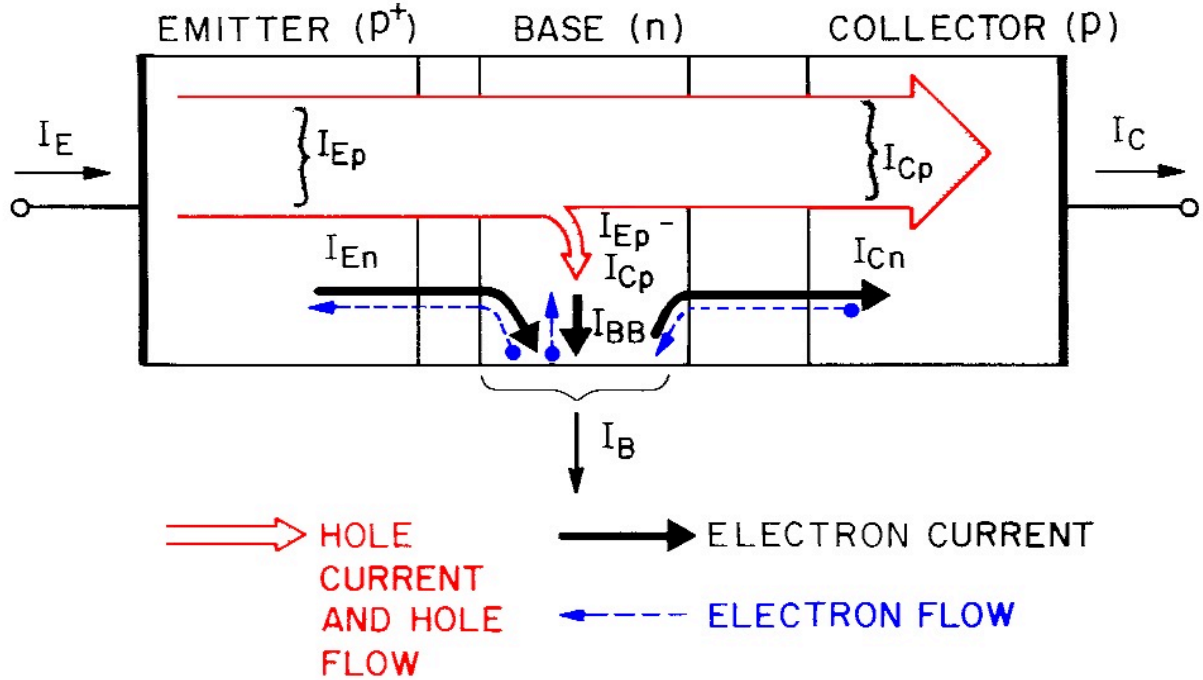

$$I_E = I_{Ep} + I_{En}$$

$$I_C = I_{Cp} + I_{Cn}$$

$$I_B = I_E - I_C = I_{En} + \underbrace{\left(I_{Ep} - I_{Cp}\right)}_{= I_{BB}} - I_{Cn}$$

Common Base Current Gain

Common Base Current Gain α_0:

$$\boxed{\alpha_0 \equiv \frac{I_{Cp}}{I_E}} = \frac{I_{Cp}}{I_{En} + I_{Ep}}$$

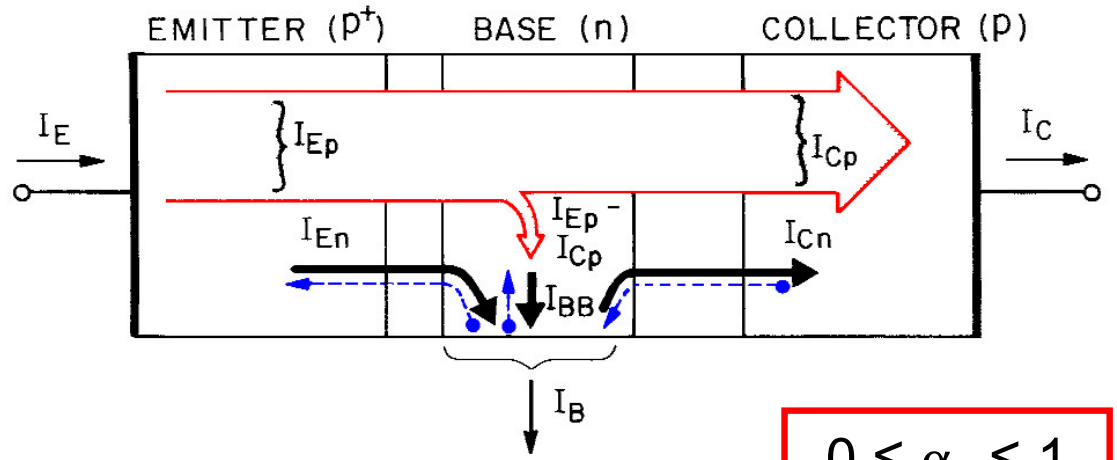

$$= \boxed{\underbrace{\left[\frac{I_{Ep}}{I_{En} + I_{Ep}}\right]}_{\equiv \gamma}} \times \boxed{\underbrace{\left[\frac{I_{Cp}}{I_{Ep}}\right]}_{\equiv \alpha_T}}$$

emitter efficiency

base transport factor

$$0 \le \alpha_0 \le 1$$

$$0 \le \alpha_T \le 1$$

$$0 \le \gamma \le 1$$

Good BJT:

$\alpha_0, \alpha_T, \gamma \approx 1$

Circuit Configurations

Common Base Configuration

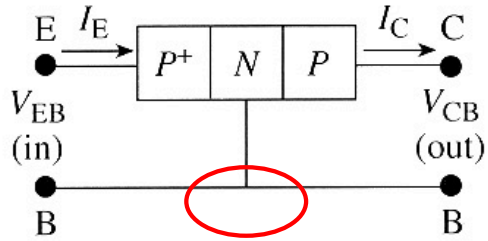

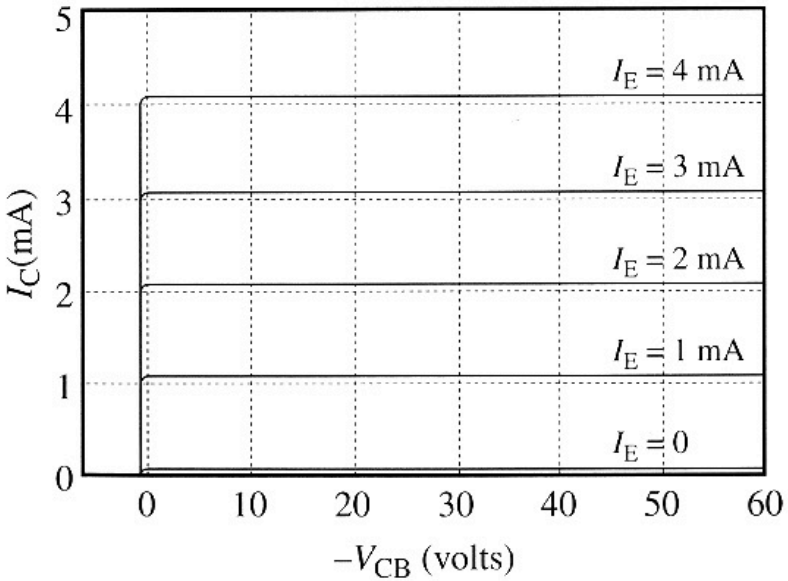

Common Emitter Configuration

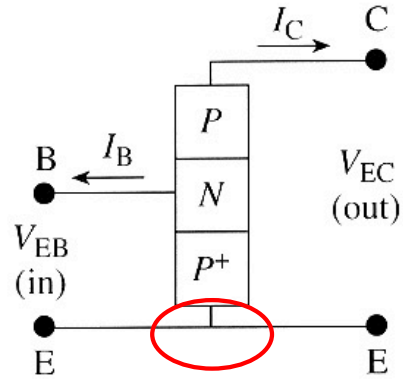

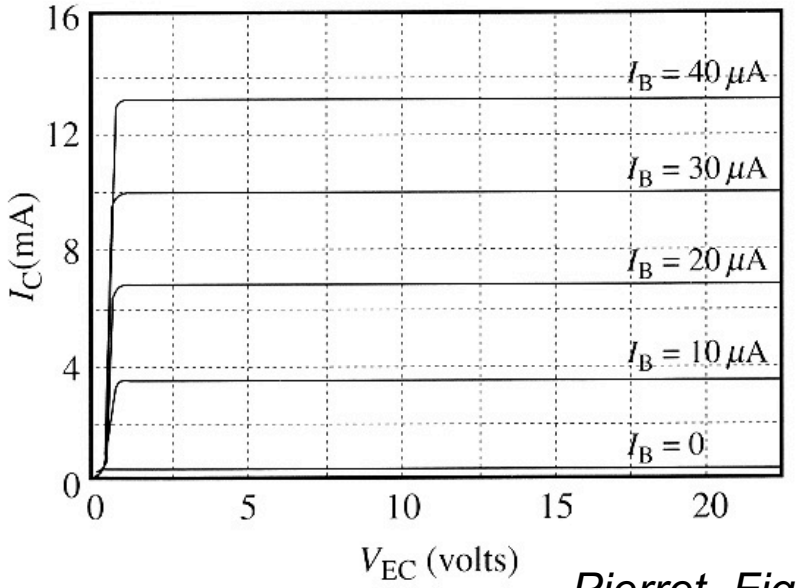

Pierret, Fig. 10.3/10.4

Common Base Circuit Characteristic

- **Output Current** = I_C

$$I_C = I_{Cp} + I_{Cn}$$

$$= \underbrace{\alpha_0}_{=\gamma\alpha_T} I_E + I_{Cn}$$

independent of V_{BC}

- **Saturation Current** = I_{CB0}

$$I_{CB0} \equiv I_{Cn} = I_C(I_E = 0)$$

saturation current through reverse-biased BC junction for open emitter ($I_E = 0$)

- **Circuit Characteristic:**

$$\boxed{I_C = \alpha_0 I_E + I_{CB0}}$$

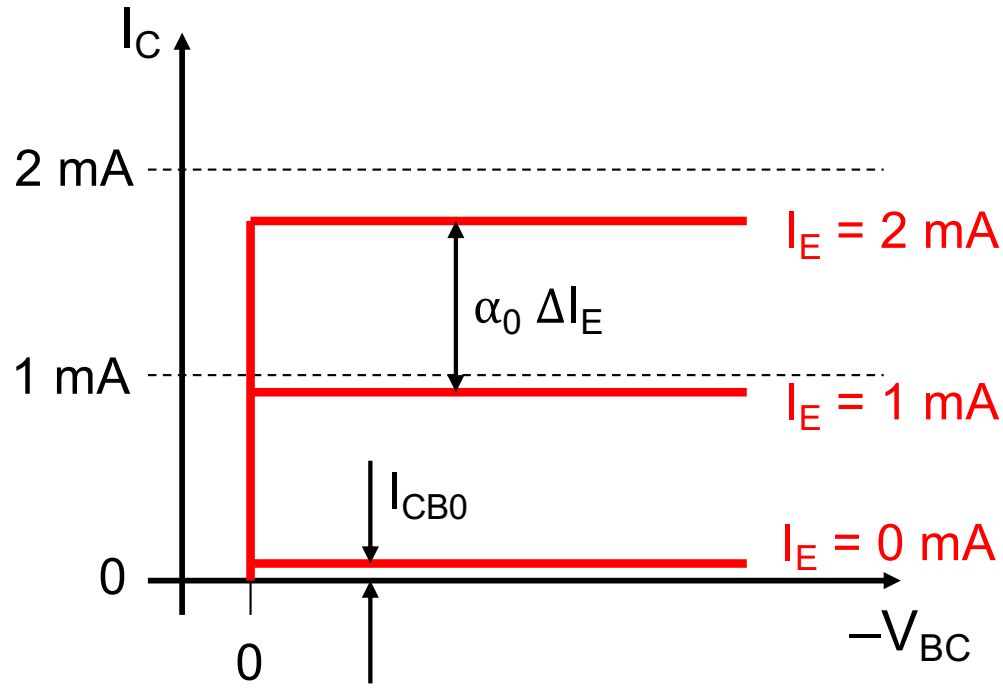

Common Emitter Characteristics

$$I_C = \alpha_0 I_E + I_{CB0} = \alpha_0 \left(I_B + I_C\right) + I_{CB0}$$

$$\left(1-\alpha_0\right) I_C = \alpha_0 I_B + I_{CB0}$$

$$I_C = \underbrace{\frac{\alpha_0}{1-\alpha_0}}_{\equiv\beta_0} I_B + \underbrace{\frac{I_{CB0}}{1-\alpha_0}}_{\equiv I_{CE0}}$$

Good BJT:
$\beta_0 >> 1$

- Current Gain β_0:

$$\beta_0 = \frac{\alpha_0}{1-\alpha_0}$$

- Circuit Characteristic
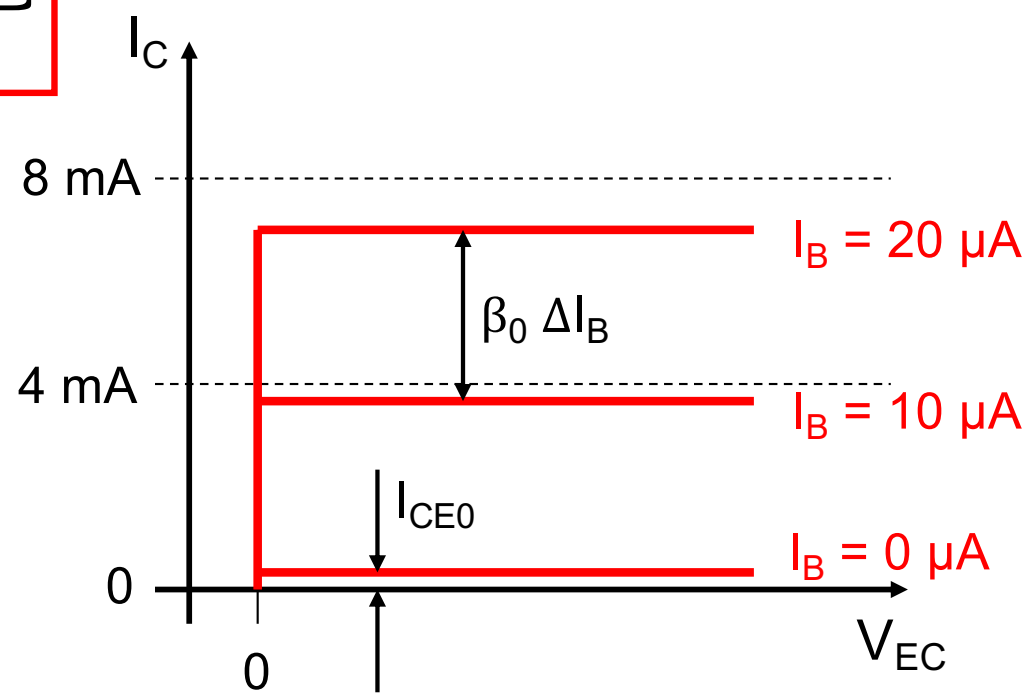
$$I_C = \beta_0 I_B + I_{CE0}$$